Cambridge Assessment International Education
Cambridge International General Certificate of Secondary Education (9–1)

CHEMISTRY **0971/22**

Paper 2 Multiple Choice (Extended) **October/November 2019**

45 minutes

Additional Materials: Multiple Choice Answer Sheet
Soft clean eraser
Soft pencil (type B or HB is recommended)

READ THESE INSTRUCTIONS FIRST

Write in soft pencil.
Do not use staples, paper clips, glue or correction fluid.
Write your name, centre number and candidate number on the Answer Sheet in the spaces provided unless this has been done for you.
DO **NOT** WRITE IN ANY BARCODES.

There are **forty** questions on this paper. Answer **all** questions. For each question there are four possible answers **A**, **B**, **C** and **D**.
Choose the **one** you consider correct and record your choice in **soft pencil** on the separate Answer Sheet.

Read the instructions on the Answer Sheet very carefully.

Each correct answer will score one mark. A mark will not be deducted for a wrong answer.
Any rough working should be done in this booklet.
A copy of the Periodic Table is printed on page 16.
Electronic calculators may be used.

This document consists of **15** printed pages and **1** blank page.

© UCLES 2019

www.root19.com +91 - 9969 353 391

1 The rate of diffusion of a gas depends on its molecular mass and the temperature.

Which combination of molecular mass and temperature gives the slowest rate of diffusion?

	molecular mass	temperature
A	high	high
B	high	low
C	low	high
D	low	low

2 A student is asked to measure the time taken for 0.4 g of magnesium carbonate to react completely with 25.0 cm^3 of dilute hydrochloric acid.

Which pieces of apparatus does the student need?

A balance, stop-clock, pipette

B balance, stop-clock, thermometer

C balance, pipette, thermometer

D stop-clock, pipette, thermometer

3 Substance Q was investigated using chromatography.

The chromatogram is shown. The diagram is not drawn to scale.

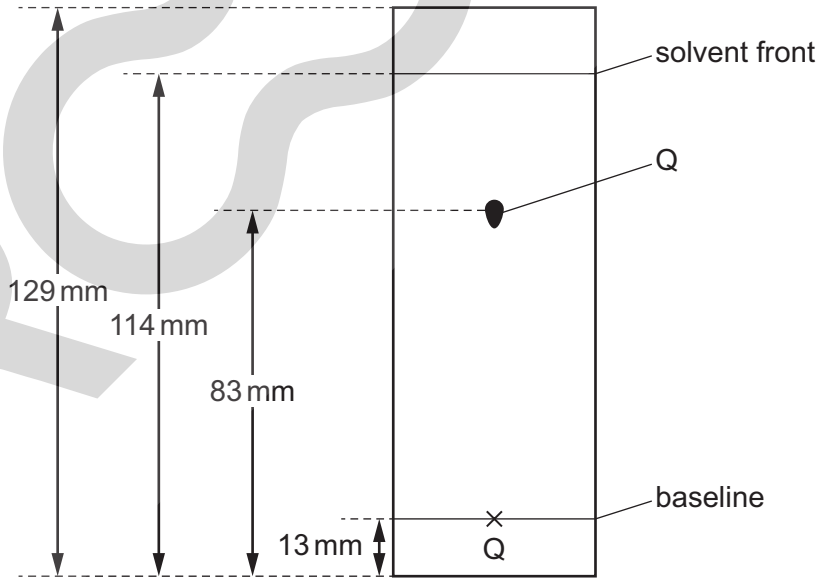

What is the R_f value of Q?

A 0.60 **B** 0.64 **C** 0.69 **D** 0.72

www.root19.com +91 - 9969 353 391

4 Which statement about an ionic compound is **not** correct?

A It conducts electricity when dissolved in water.

B It has a high melting point due to strong attractive forces between ions.

C It has a regular lattice of oppositely charged ions in a 'sea of electrons'.

D The ionic bonds are formed between metallic and non-metallic elements.

5 What is the total number of electrons in one molecule of ammonia, NH_3?

A 6 **B** 8 **C** 10 **D** 11

6 Rubidium has two isotopes, $^{85}_{37}Rb$ and $^{87}_{37}Rb$.

Which statement explains why both isotopes have the same chemical properties?

A They have the same number of protons.

B They have the same number of outer shell electrons.

C They have different numbers of neutrons.

D They have different mass numbers.

7 Which statement about the structure and properties of silicon(IV) oxide is **not** correct?

A It has a giant structure similar to that of diamond.

B It has a high melting point due to the strong attractive force between molecules.

C There are strong covalent bonds between silicon and oxygen.

D There are no free electrons, so silicon(IV) oxide does not conduct electricity.

8 Which statement describes the structure of copper?

A It has a lattice of negative ions in a 'sea of electrons'.

B It has a lattice of negative ions in a 'sea of protons'.

C It has a lattice of positive ions in a 'sea of electrons'.

D It has a lattice of positive ions in a 'sea of protons'.

9 Phosphorus reacts with oxygen to form phosphorus(III) oxide as shown.

$$4P(s) + 3O_2(g) \rightarrow 2P_2O_3(s)$$

Which mass of phosphorus(III) oxide is produced from 6.2 g of phosphorus?

A 1.1 g **B** 5.5 g **C** 11.0 g **D** 22.0 g

www.root19.com +91 - 9969 353 591

10 Calcium carbonate is heated. Calcium oxide and carbon dioxide gas are formed.

The equation for the reaction is shown.

$$CaCO_3 \rightarrow CaO + CO_2$$

225 kg of calcium carbonate is heated until there is no further change in mass.

The yield of calcium oxide is 85 kg.

What is the percentage yield?

A 37.8% **B** 47.2% **C** 67.5% **D** 85.0%

11 The diagram shows a simple cell.

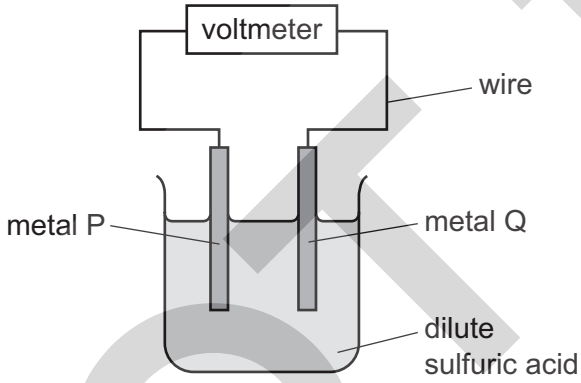

Which pair of metals produces the largest voltage?

	metal P	metal Q
A	magnesium	iron
B	magnesium	copper
C	zinc	iron
D	zinc	copper

12 What are the ionic half-equations for the electrode reactions during the electrolysis of concentrated aqueous sodium chloride?

	anode	cathode
A	$Cl_2 + 2e^- \rightarrow 2Cl^-$	$H_2 \rightarrow 2H^+ + 2e^-$
B	$2Cl^- \rightarrow Cl_2 + 2e^-$	$2H^+ + 2e^- \rightarrow H_2$
C	$H_2 \rightarrow 2H^+ + 2e^-$	$Cl_2 + 2e^- \rightarrow 2Cl^-$
D	$2H^+ + 2e^- \rightarrow H_2$	$2Cl^- \rightarrow Cl_2 + 2e^-$

© UCLES 2019
www.root19.com

+91 - 9969 353 391

13 The temperature of the water in two beakers, X and Y, is measured as 21.5 °C.

5 g of sodium chloride is dissolved in the water in beaker X. The temperature changes to 18.0 °C.

5 g of calcium oxide is dissolved in the water in beaker Y. The temperature changes to 29.4 °C.

Which types of process are occurring in beakers X and Y?

	X	Y
A	endothermic	endothermic
B	endothermic	exothermic
C	exothermic	endothermic
D	exothermic	exothermic

14 Which gases are used to generate electricity in a fuel cell?

A carbon dioxide and oxygen

B hydrogen and methane

C hydrogen and oxygen

D methane and carbon dioxide

15 Which row identifies a chemical and a physical change?

	chemical change	physical change
A	boiling ethanol	burning ethanol
B	burning ethanol	evaporating ethanol
C	dissolving ethanol in water	burning ethanol
D	evaporating ethanol	dissolving ethanol in water

© UCLES 2019
www.root19.com

+91 - 9969 353 591

16 A sample of dilute nitric acid is added to lumps of limestone in a conical flask. The conical flask is placed on a balance and the loss in mass is measured.

A second sample of nitric acid of a different concentration is separately tested. All other conditions are kept the same.

The loss in mass in 1 minute at each concentration of nitric acid is shown.

concentration in mol / dm^3	loss in mass in 1 minute / g
0.5	0.15
1.0	0.25

Which row describes and explains the results obtained using 1.0 mol / dm^3 nitric acid compared with 0.5 mol / dm^3 nitric acid?

	description	explanation
A	decrease in reaction rate	decrease in particle collision energy
B	decrease in reaction rate	increase in particle collision rate
C	increase in reaction rate	increase in particle collision rate
D	increase in reaction rate	increase in particle collision rate and collision energy

17 When carbon monoxide reacts with hydrogen, methanol is formed.

$$CO(g) + 2H_2(g) \rightleftharpoons CH_3OH(g)$$

The forward reaction is exothermic.

Which statements are correct?

1 There are more moles of gas on the left-hand side of the reaction.

2 Increasing the temperature increases the amount of methanol at equilibrium.

3 Increasing the pressure increases the amount of methanol at equilibrium.

4 Increasing the initial amount of hydrogen decreases the amount of methanol at equilibrium.

A 1 and 2 only **B** 1 and 3 only **C** 2 and 4 only **D** 3 and 4 only

www.root19.com +91 - 9969 353 391

18 In the blast furnace, iron is formed when iron(III) oxide reacts with carbon monoxide in a redox reaction.

$$Fe_2O_3 + 3CO \rightarrow 2Fe + 3CO_2$$

Which substance is the oxidising agent and which substance is the reducing agent?

	oxidising agent	reducing agent
A	CO	Fe_2O_3
B	CO_2	Fe
C	Fe	CO_2
D	Fe_2O_3	CO

19 Which oxide is classified as an amphoteric oxide?

A aluminium oxide

B calcium oxide

C copper(II) oxide

D nitrogen oxide

20 Which statement describes the properties of hydrochloric acid?

A Carbon dioxide is produced when limestone reacts with hydrochloric acid.

B Hydrogen is produced when sodium hydroxide reacts with hydrochloric acid.

C Methyl orange turns yellow in strong hydrochloric acid.

D Red litmus paper turns blue when dipped into hydrochloric acid.

© UCLES 2019
www.root19.com

+91 - 9969 353 591

21 A method used to make copper(II) sulfate crystals is shown.

1 Place dilute sulfuric acid in a beaker.

2 Warm the acid.

3 Add copper(II) oxide until it is in excess.

4 Filter the mixture.

5 Evaporate the filtrate until crystals start to form.

6 Leave the filtrate to cool.

What are the purposes of step 3 and step 4?

	step 3	step 4
A	to ensure all of the acid has reacted	to obtain solid copper(II) sulfate
B	to ensure all of the acid has reacted	to remove the excess of copper(II) oxide
C	to speed up the reaction	to obtain solid copper(II) sulfate
D	to speed up the reaction	to remove the excess of copper(II) oxide

22 Lead(II) sulfate is an insoluble salt.

Which reaction produces a mixture from which lead(II) sulfate is obtained by filtration?

A adding solid lead(II) carbonate to dilute sulfuric acid

B adding solid lead(II) hydroxide to dilute sulfuric acid

C adding metallic lead to dilute sulfuric acid

D adding aqueous lead(II) nitrate to dilute sulfuric acid

23 Helium is a noble gas.

Which statement about helium is correct?

A It has eight electrons in its outer shell.

B It is a diatomic gas.

C It is reactive.

D It is used for filling balloons.

root19

www.root19.com +91 - 9969 353 391

24 Which pair of elements reacts together most violently?

A chlorine and lithium

B chlorine and potassium

C iodine and lithium

D iodine and potassium

25 Iron(II) ions can be oxidised to iron(III) ions by hydrogen peroxide.

Which statement explains why iron is a transition element?

A Iron is a transition element because it can be oxidised.

B Iron is a transition element because it has variable oxidation states.

C Iron is a transition element because it takes part in redox reactions.

D Iron is a transition element because it reacts with chlorine.

26 Some properties of substance X are listed.

- It conducts electricity when molten.
- It has a high melting point.
- It burns in oxygen and the oxide dissolves in water to give a solution with pH 11.

What is X?

A a covalent compound

B a macromolecule

C a metal

D an ionic compound

27 Which row describes the uses of aluminium, copper and mild steel?

	aluminium	copper	mild steel
A	aircraft bodies	electrical wiring	car bodies
B	car bodies	cooking utensils	electrical wiring
C	electrical wiring	aircraft bodies	food containers
D	food containers	aircraft bodies	cooking utensils

© UCLES 2019
www.root19.com

+91 - 9969 353 591

28 The properties of four metals are listed.

- Metal W does not react with dilute hydrochloric acid.
- Metal X reacts with dilute hydrochloric acid.
- Metal Y displaces metal X from an aqueous solution of its ions.
- Metal Z reacts with water and dilute hydrochloric acid.

What is the order of reactivity of the metals?

	most reactive →			least reactive
A	W	X	Y	Z
B	W	Y	X	Z
C	Z	X	Y	W
D	Z	Y	X	W

29 Which statement about the extraction of aluminium from aluminium oxide is correct?

A Aluminium is formed at the positive electrode during electrolysis.

B Pure aluminium oxide is dissolved in molten cryolite.

C Pure aluminium oxide is electrolysed using aluminium as the positive electrode.

D Pure aluminium oxide is heated with carbon to form carbon dioxide and aluminium.

30 River water contains soluble impurities, insoluble impurities and bacteria.

River water is made safe to drink by filtration and chlorination.

Which statement is correct?

A Filtration removes bacteria and insoluble impurities, and chlorination removes soluble impurities.

B Filtration removes insoluble impurities, and chlorination kills the bacteria.

C Filtration removes soluble and insoluble impurities, and chlorination kills the bacteria.

D Filtration removes soluble impurities and bacteria, and chlorination removes insoluble impurities.

© UCLES 2019
www.root19.com

+91 - 9969 353 391

31 Which process is used to separate nitrogen and oxygen from air?

A chromatography

B evaporation

C filtration

D fractional distillation

32 The apparatus shown is set up and left for a week.

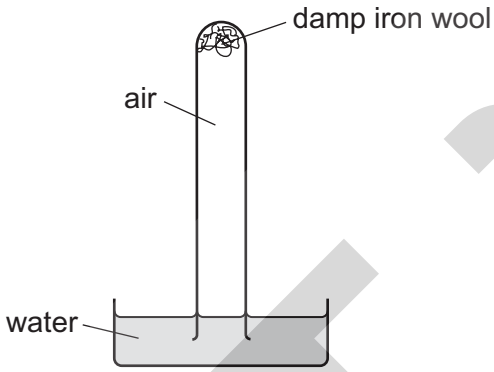

Which diagram shows the level of the water at the end of the week?

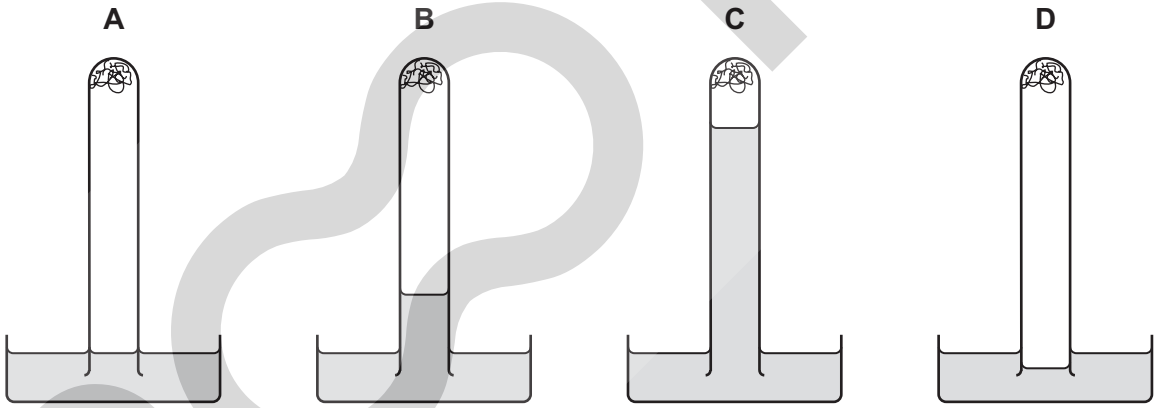

© UCLES 2019
www.root19.com

+91 - 9969 353 591

33 The diagram represents an outline of the carbon cycle.

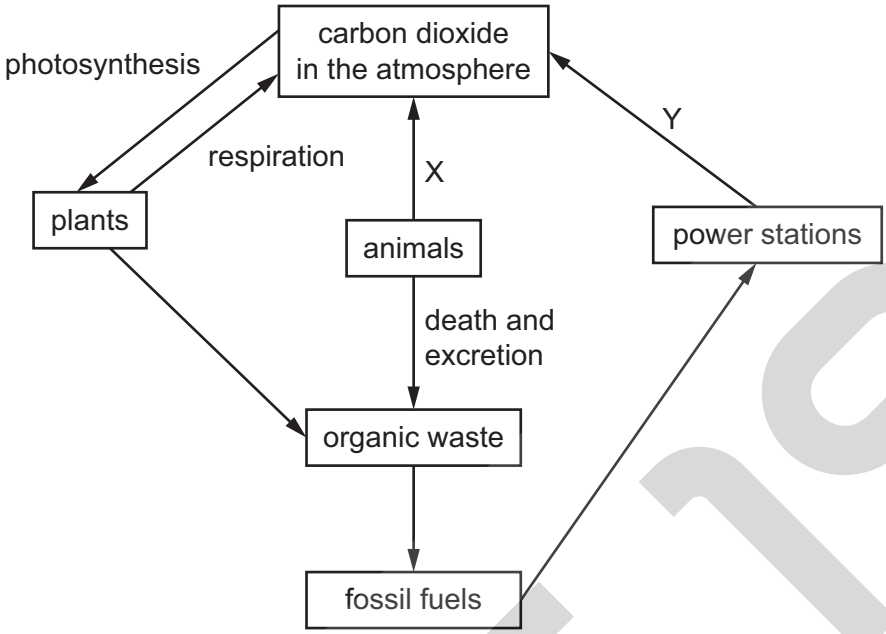

Which processes are X and Y?

	X	Y
A	combustion	respiration
B	decomposition	respiration
C	photosynthesis	combustion
D	respiration	combustion

34 Ammonium sulfate is used as a fertiliser.

It is made from ammonia and sulfuric acid.

Which words complete gaps 1, 2 and 3?

The .....1..... is made by the .....2..... process in which .....3..... is used as a catalyst.

	1	2	3
A	ammonia	Contact	iron
B	ammonia	Haber	vanadium(V) oxide
C	sulfuric acid	Contact	vanadium(V) oxide
D	sulfuric acid	Haber	iron

© UCLES 2019
www.root19.com

+91 - 9969 353 391

35 Which statement about limestone and lime is correct?

A Limestone combines with water to produce slaked lime.

B Lime is obtained from limestone by oxidation.

C Lime is used in the desulfurisation of flue gases.

D Lime is used in the treatment of alkaline soil.

36 Some fractions obtained from petroleum are listed.

	fraction	use	position collected in the fractionating column
1	gasoline	waxes and polishes	below refinery gas
2	bitumen	making roads	above kerosene
3	kerosene	jet fuel	below gasoline
4	refinery gas	heating and cooking	above gasoline

Which rows are correct?

A 1, 3 and 4

B 2, 3 and 4

C 3 and 4 only

D 4 only

37 Which products are obtained by the cracking of an alkane?

	alkene	hydrogen	water
A	✓	✓	✓
B	✓	✓	✗
C	✓	✗	✓
D	✗	✓	✓

© UCLES 2019
www.root19.com

+91 - 9969 353 591

38 Ethanol is produced by fermentation or by the reaction of ethene with steam.

Which row is correct?

	by fermentation	from ethene
A	uses a temperature of 100 °C	uses a temperature of 350 °C
B	needs yeast as a catalyst	does not need a catalyst
C	very slow reaction	very fast reaction
D	high yield of ethanol	low yield of ethanol

39 The diagram shows the structure of a monomer and of the polymer made from it.

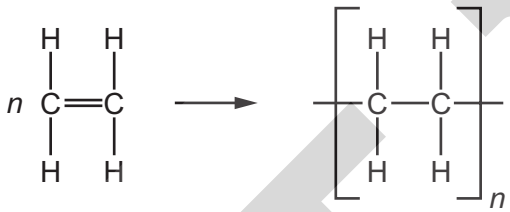

What are the monomer and polymer?

	monomer	polymer
A	ethane	poly(ethane)
B	ethane	poly(ethene)
C	ethene	poly(ethane)
D	ethene	poly(ethene)

40 The structure of a naturally occurring polymer, X, is shown.

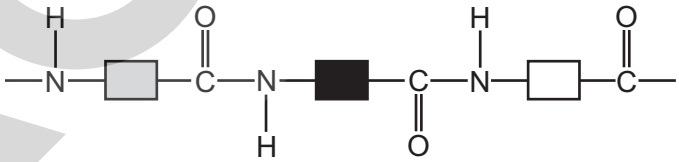

What is X?

A an amino acid

B a carbohydrate

C a protein

D a sugar

www.root19.com +91 - 9969 353 391

BLANK PAGE

Permission to reproduce items where third-party owned material protected by copyright is included has been sought and cleared where possible. Every reasonable effort has been made by the publisher (UCLES) to trace copyright holders, but if any items requiring clearance have unwittingly been included, the publisher will be pleased to make amends at the earliest possible opportunity.

To avoid the issue of disclosure of answer-related information to candidates, all copyright acknowledgements are reproduced online in the Cambridge Assessment International Education Copyright Acknowledgements Booklet. This is produced for each series of examinations and is freely available to download at www.cambridgeinternational.org after the live examination series.

Cambridge Assessment International Education is part of the Cambridge Assessment Group. Cambridge Assessment is the brand name of the University of Cambridge Local Examinations Syndicate (UCLES), which itself is a department of the University of Cambridge.

www.root19.com +91 - 9969 353 391

The Periodic Table of Elements

Key

atomic number
atomic symbol
name
relative atomic mass

Group I	Group II											Group III	Group IV	Group V	Group VI	Group VII	Group VIII
							1 H hydrogen 1										2 He helium 4
3 Li lithium 7	4 Be beryllium 9											5 B boron 11	6 C carbon 12	7 N nitrogen 14	8 O oxygen 16	9 F fluorine 19	10 Ne neon 20
11 Na sodium 23	12 Mg magnesium 24											13 Al aluminium 27	14 Si silicon 28	15 P phosphorus 31	16 S sulfur 32	17 Cl chlorine 35.5	18 Ar argon 40
19 K potassium 39	20 Ca calcium 40	21 Sc scandium 45	22 Ti titanium 48	23 V vanadium 51	24 Cr chromium 52	25 Mn manganese 55	26 Fe iron 56	27 Co cobalt 59	28 Ni nickel 59	29 Cu copper 64	30 Zn zinc 65	31 Ga gallium 70	32 Ge germanium 73	33 As arsenic 75	34 Se selenium 79	35 Br bromine 80	36 Kr krypton 84
37 Rb rubidium 85	38 Sr strontium 88	39 Y yttrium 89	40 Zr zirconium 91	41 Nb niobium 93	42 Mo molybdenum 96	43 Tc technetium –	44 Ru ruthenium 101	45 Rh rhodium 103	46 Pd palladium 106	47 Ag silver 108	48 Cd cadmium 112	49 In indium 115	50 Sn tin 119	51 Sb antimony 122	52 Te tellurium 128	53 I iodine 127	54 Xe xenon 131
55 Cs caesium 133	56 Ba barium 137	57–71 lanthanoids	72 Hf hafnium 178	73 Ta tantalum 181	74 W tungsten 184	75 Re rhenium 186	76 Os osmium 190	77 Ir iridium 192	78 Pt platinum 195	79 Au gold 197	80 Hg mercury 201	81 Tl thallium 204	82 Pb lead 207	83 Bi bismuth 209	84 Po polonium –	85 At astatine –	86 Rn radon –
87 Fr francium –	88 Ra radium –	89–103 actinoids	104 Rf rutherfordium –	105 Db dubnium –	106 Sg seaborgium –	107 Bh bohrium –	108 Hs hassium –	109 Mt meitnerium –	110 Ds darmstadtium –	111 Rg roentgenium –	112 Cn copernicium –		114 Fl flerovium –		116 Lv livermorium –		

lanthanoids	57 La lanthanum 139	58 Ce cerium 140	59 Pr praseodymium 141	60 Nd neodymium 144	61 Pm promethium –	62 Sm samarium 150	63 Eu europium 152	64 Gd gadolinium 157	65 Tb terbium 159	66 Dy dysprosium 163	67 Ho holmium 165	68 Er erbium 167	69 Tm thulium 169	70 Yb ytterbium 173	71 Lu lutetium 175
actinoids	89 Ac actinium –	90 Th thorium 232	91 Pa protactinium 231	92 U uranium 238	93 Np neptunium –	94 Pu plutonium –	95 Am americium –	96 Cm curium –	97 Bk berkelium –	98 Cf californium –	99 Es einsteinium –	100 Fm fermium –	101 Md mendelevium –	102 No nobelium –	103 Lr lawrencium –

The volume of one mole of any gas is 24 dm^3 at room temperature and pressure (r.t.p.).

© UCLES 2019
www.root19.com

+91 - 9969 353 391